Analog Transmitter Display

The position of magnetic floats / pistons is detected by means of a Hall sensor and output as an analog signal.

- Backlit graphic display (LCD)
- Analog output (4-20 mA)
- 2 switching points
- Programmable hysteresis
- Bright indicator LED
- Easy programming
- Stainless steel case
- Tempered mineral glass display cover

D-EN-Analog-Transmitter-Display-20200131

©2020 Schmidt Mess- und Regeltechnik
Fon 0 67 32 - 91 91 20 Fax 0 67 32 - 96 24 42 info@schmidt-messtechnik.de

Analog Transmitter Display

The position of magnetic floats / pistons is detected by means of a Hall sensor and output as an analog signal.

Operation
The position of a magnetic float / piston is detected by means of Hall sensors and converted into an analog signal.

Application
Use in combination with float-type sensors for various flow media (see table on page 2)

Features
- Backlit graphic display (LCD)
- Analog output (4-20 mA)
- 2 switching points
- Programmable hysteresis
- Bright indicator LED
- Easy programming
- Stainless steel case
- Tempered mineral glass display cover

Possible combinations			
Medium	**Sensor**	**Transmitter**	**Combination**
water	DUM	+ Display	= DUM/Display
	DWM	+ Display	= DWM/Display
	RVM/U-1	+ Display	= RVM/U-1/Display
	RVM/U-2	+ Display	= RVM/U-2/Display
	RVM/U-4	+ Display	= RVM/U-4/Display
oil	DKM-1	+ Display	= DKM-1/Display
	DKM-2	+ Display	= DKM-2/Display
	DKME	+ Display	= DKME/Display
air	DWM-L	+ Display	= DWM-L/Display
	RVM/U-L-1	+ Display	= RVM/U-L-1/Display
	RVM/U-L-2	+ Display	= RVM/U-L-2/Display
	RVM/U-L-4	+ Display	= RVM/U-L-4/Display

Installation information
The operating instructions for DISPLAY must be observed!
Refer also to the applicable data sheets and operating instructions for the flow monitor!
Download: www.schmidt-messtechnik.de

©2020 Schmidt Mess- und Regeltechnik
Fon 0 67 32 - 91 91 20 Fax 0 67 32 - 96 24 42 info@schmidt-messtechnik.de

Analog Transmitter Display

The position of magnetic floats / pistons is detected by means of a Hall sensor and output as an analog signal.

Technical data	
Display	• Graphic transreflective LCD (32 x 16 pixels) with backlight (Easy to read in the dark and in direct sunlight) • Display of value and dimension (unit selectable) • Reading position not fully rotatable through 360 ° (overturn protection)
LED	LED indicator light (red) indicates that the sensor is flashing on the display, e.g. Switching points exceeded or undershot as well as error messages.
Analog output	
Current output (standard)	4 (0) - 20 mA (selection via rotation)
Max. load	500 Ω
Voltage output	2 (0) - 10 V (please specify when ordering!)
Max. current	10 mA
The programmable range enables optimal adaptation to the respective application.	
Switching output	
Number of exits	2 short-circuit proof and reverse polarity protected switching outputs Alarm: Low / Cable break: Low / OK: High
Type of exits	Push-pull outputs The outputs are self-configuring and can be connected as PNP or NPN switches. The switch contacts can be programmed as min or max contacts.
Load	Total load max. 300 mA
Hysteresis	Selectable (adjustable) in amount and direction.
Programming	Programming via rotating ring (see operating instructions). For example, Switching points, hysteresis or measuring span can be programmed. Programming protection by turning 180 ° or removing the programming ring.

©2020 Schmidt Mess- und Regeltechnik
Fon 0 67 32 - 91 91 20 Fax 0 67 32 - 96 24 42 info@schmidt-messtechnik.de

Analog Transmitter Display

The position of magnetic floats / pistons is detected by means of a Hall sensor and output as an analog signal.

Technical data		
Power supply	24 V (18…30 V)	
Power consumption	< 1 W	
Connection	For circular connectors M 12 x 1,5-pin.	
Protection	IP 67	
Accuracy	DUM, DWM, RVM/U-1, RVM/U-2 and RVM/U-4	± 3% of full scale
	DKM-1, DKM-2 and DKME	± 5% of full scale (with calibration at a specified viscosity)
	DKM-1, DKM-2, DKME	± 10% of full scale (viscosity compensated)
	DWM-L, RVM/U-L-1, RVM/U-L-2, RVM/U-L-4	± 10% of full scale
Repeatability	± 1% of full scale	
Operating temperature	-20°C…+70°C	
Storage temperature	-20°C…+80°C	
Material	Body	Stainless steel 1.4305
	Mineral glass	Mineral glass hardened
	Magnet	Cobalt samarium
	Program ring	POM
Notes	The sensor is configured according to your specifications, so it is immediately ready for use without programming. Please note that the flow meter and the DISPLAY electronics are matched to each other and must not be replaced! For further information, please refer to the operating instructions for the DISPLAY analog transmitter. Please also note the data sheets and operating instructions for the respective flow sensor!	

©2020 Schmidt Mess- und Regeltechnik
Fon 0 67 32 - 91 91 20 Fax 0 67 32 - 96 24 42 info@schmidt-messtechnik.de

Analog Transmitter Display

The position of magnetic floats / pistons is detected by means of a Hall sensor and output as an analog signal.

Technical drawing

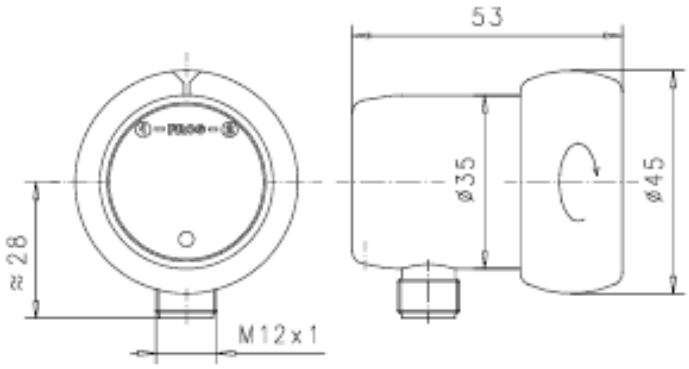

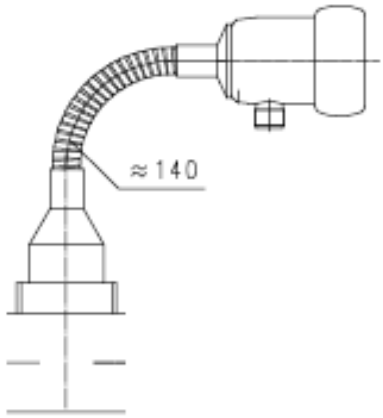

Version with gooseneck

Connection diagram

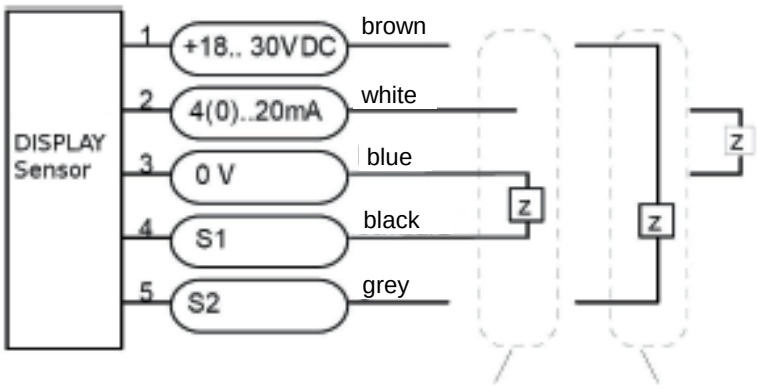

Example: **PNP** **<u>or</u>** **NPN**

Z = load

Important instructions!
Technical changes and errors reserved.
Pictures can be similar.
The operating instructions belonging to this device must be observed! Download at www.schmidt-messtechnik.com.

©2020 Schmidt Mess- und Regeltechnik
Fon 0 67 32 - 91 91 20 Fax 0 67 32 - 96 24 42 info@schmidt-messtechnik.de